OASIS*NET*: an OASIS Network Simulator

Yong Tian and George Gross
Department of Electrical and Computer Engineering
University of Illinois at Urbana-Champaign
Urbana, IL 61801

Abstract: This paper describes a Web-based simulator of the Federal Energy Regulatory Commission (FERC) mandated Open Access Same-Time Information System (OASIS) network. OASIS is the real-time information network/electronic bulletin board whose specification are spelled out in FERC Order 889. The purpose of the simulator is to provide a tool for study of the various aspects of a multi-node OASIS network and to gain a strong intuitive feel for its operations. For a specified simulation period, the OASIS*NET* simulator reproduces the behavior of an OASIS network using the same communications medium as the actual system, the Internet, and with multiple players using the simulator simultaneously. Users dynamically interact with the simulator through World Wide Web (WWW) browsers. Salient features of the simulator are its modular architecture, the ability to simulate multi-node OASIS network operations and to accept simultaneous access from remote users through the use of client/server technology. The simulation focuses on the dissemination and use of the available transmission capability information. Sample applications of the new simulator are discussed.

INTRODUCTION

To promote wholesale competition through non-discriminatory open access, Federal Energy Regulatory Commission (FERC) required each transmission owning public utility or its operator to create a real-time information network to disseminate information about the availability and price of transmission services. Open Access Same-Time Information System (OASIS) is the name given to the information system required by FERC. It is estimated that all the public transmission systems in the United States will be represented by 20-35 OASIS nodes [1]. In its initial phase, the entire network will be connected through the Internet. It will be heavily used by both transmission customers (TCs) and transmission providers (TPs) through their control center personnel in conducting wholesale transactions of electricity.

The development of a new system, the OASIS, and the entry into the electricity business of new players, such as marketers, brokers, scheduling coordinators and load aggregators constituting new TCs, have combined to create a need for a simulation tool for the following purposes:

- to allow personnel in marketing functions to understand the impacts of OASIS information on markets
- to enable information system designers to study properties and effects of OASIS
- to provide policy makers and regulators with a tool to study the impacts of existing and proposed regulations
- to provide operating personnel with a basic understanding of the OASIS operations and with a useable introductory training tool.

The OASIS*NET* simulator makes detailed use of the advances in computing, simulation techniques and visualization technology in the construction of a user-friendly tool. The simulator effectively represents the physical constraints and considerations in the interconnected power transmission system together with the impacts of the various transactions that are being contemplated or have already been committed. The focus of the simulation is on the dissemination and use of available transfer capability (ATC) information [3].

The rapid advances in computer system have allowed power system simulation software to grow from simple text input/output to extensive graphic user interface (GUI) [4]. Even faster advances in the Internet and World Wide Web (WWW) have enabled multiple remote user access through standard tools such as the increasingly widely used web browser. The principal challenges in developing a simulator for OASIS include the calculation of ATC and total transmission capability (TTC) in a transmission network, evaluation of the impacts of load fluctuations and transactions on ATC, systematic record keeping of all transmission services, and incorporation of the effect of communications delay, both inter-OASIS nodes and between an OASIS node and its users. The OASIS*NET* simulator effectively addresses these challenges. For a specified simulation period, the OASIS*NET* simulator reproduces an OASIS network of multiple nodes using the same communications medium as the actual system, the Internet, and with multiple players using the simulator simultaneously. Users can dynamically interact with the

PE-139-PWRS-1-10-1997 A paper recommended and approved by the IEEE Power System Analysis, Computing and Economics Committee of the IEEE Power Engineering Society for publication in the IEEE Transactions on Power Systems. Manuscript submitted March 18, 1997; made available for printing October 21, 1997.

simulator through web browsers. Salient features of the simulator are its modular architecture, the ability to simulate multi-node OASIS network operations and to accept simultaneous access from remote users through use of client/server technology. This paper describes the major aspects of the OASIS*NET* and provides a sample of its displays.

The actual implementation of each OASIS node results in a certain level of uniqueness in terms of design and user interface. In addition, the regional differences in the nature of transmission systems -- the way they operate, the manner in which transmission services are provided, and the specific technique for evaluating ATC (e.g., network response or rated path [5]) -- bring about specific differences in the various OASIS nodes. As such, the generic OASIS*NET* simulation tool described here will need a certain amount of customization to provide high fidelity emulation of each particular OASIS node. This is beyond the scope of the work reported here. Also, given the ATC oriented focus of our tool, we adopted a loose interpretation of the specific FERC requirements related to the template file formats [2]. Such formats will be part of the planned extensions of OASIS*NET* but beyond the scope of the present paper.

In the next section we review the FERC requirements. This is followed by a section summarizing key concepts in ATC and TTC evaluation. We then describe the OASIS*NET* structure, and describe the application of the simulator and include some representative displays.

OVERVIEW OF OASIS

OASIS is the culmination of FERC's vision of a uniform electronic bulletin board to make open access non-discriminatory transmission service a reality in most of the U.S. It represents effective use of available technology and is the vehicle that the FERC employed to bring about functional unbundling in the electric power industry. FERC's comparability requirements state that TCs must have access to the same information the TPs have *at the same time*. In the Order 889 [4], FERC outlines key information requirements for OASIS. These requirements may be grouped into four categories. These categories and the information contents are :

- *transmission system information* -- ATC, system reliability, response to system conditions, and date and time stamp for all the information.
- *transmission service information* -- complete tariff, service discounts, ancillary services, and current operating and economic conditions.
- *transmission service request and response data* -- scheduling of power transfers, service interruptions and curtailments, service parties' identities, and audit log for discretionary actions.
- *general information* -- announcements and value-added services.

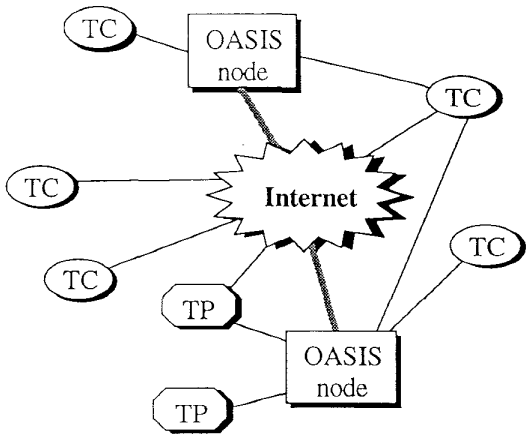

Figure 1. The OASIS network

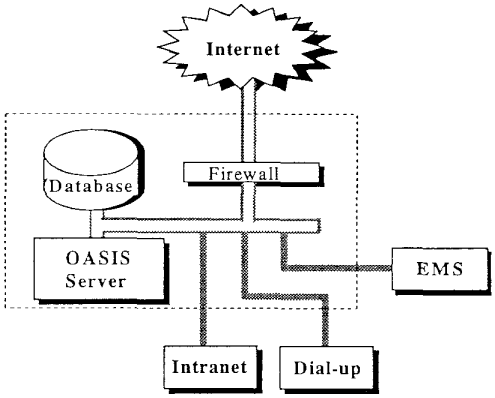

Figure 2. OASIS Node

All transmission system operators are required by FERC to install and operate an OASIS node. FERC also requires that the Internet be used as the nationwide connection for all OASIS nodes and the OASIS nodes be accessible by authorized users through Internet, regardless of their physical location. Figure 1 illustrates the conceptual structure for the Internet-based OASIS network. The interconnection between OASIS nodes and users is clearly shown. In addition, all OASIS functions must support the use of WWW protocols, the Hypertext Transport Protocol (HTTP), and WWW tools, such as web browsers. Figure 2 shows the architecture of an OASIS node. The node is connected to the Internet through a firewall to ensure data security. Private Intranet and dial-up connections to users are also supported by the OASIS node. The database is used for storage of ATC and transaction data records, query searches of those records, as well as a backup in case of system malfunction. The connection to EMS is also provided to allow accurate real-time data for ATC calculations.

THE ROLE OF ATC IN OASIS

The most basic type of system information required in OASIS is the transfer capabilities TTC and ATC. North American Electricity Reliability Council (NERC) conceptually defines TTC as the amount of power that may be transferred over the interconnected network reliably and ATC as a measure of the transfer capability remaining in the transmission network above a base case for commercial transactions. By their very nature, transfer capabilities are a function of the system-wide transmission network conditions. Two key properties of the transfer capability are implicitly stated in these definitions:

1. TTC and ATC are always defined between a two-area pair consisting of a power selling area and a power buying area.
2. TTC and ATC are time dependent quantities because the transmission system conditions vary over time.

The transfer capabilities are generally limited by three types of limits – thermal, voltage, and stability. Thermal limits constrain the amount of transfer that transmission network components can safely handle without being overloaded. Voltage limits are imposed so that the operating procedures in place can keep voltages across the transmission system within acceptable operating range. Stability limits constitute a general class of limits to ensure the survival of the interconnected transmission system in case of large disturbances. The TTC is determined by the most constraining one of these limits, and as system conditions vary, the limit type and quantity may change. There are four types of transmission services provided for commercial transactions, non-recallable scheduled (NSCH), recallable scheduled (RSCH), non-recallable reserved (NRES), and recallable reserved (RRES). They are differentiated by their recallability level and the date and time stamp of the request for service. Recallability is defined by NERC as the right of a TP to interrupt all or part of a transmission service for any reason, including economic, that is consistent with FERC policy and the TP's transmission service tariffs or contract provisions [5]. Figure 3 shows the transmission service type as a function of the time dimension. The scheduling time t is the reference point with respect to which the operating and planning horizons are defined. Operating horizon, typically a day, is a period over which the scheduled services are performed by the TP. The transmission services requested at a time $t'>t$ for a period inside the operating horizon are called scheduled services. Any period beyond that is considered to be in the planning horizon and only reservation can be made in the request for service.

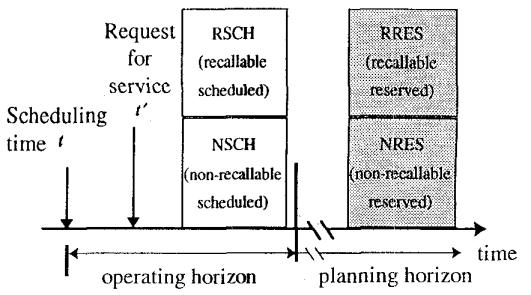

Figure 3. Transmission service types

The priority of services are illustrated in Figure 4. The shaded blocks represent reserve service requested at time $t''<t$. The planning horizon at t'' covers the operating horizon for the scheduling time t. The white blocks represent additional services requested at time $t'>t$. Since t' falls within the operating horizon of t, these services are scheduled services. As shown, the non-recallable services generally have higher priority than recallable services. For the same recallability level services, date and time stamp of request determines the priority.

To make use of the ATC for actual transmission services in the real world, two more concrete and useable quantities called non-recallable ATC (NATC) and recallable ATC (RATC) are introduced. NERC defines *NATC* as follows:

$$NATC(t) = TTC(t) - TRM(t) - NTS(t)$$

where *TRM* is the transmission reliability margin to account for uncertainties in calculation of TTC and ATC. *NTS* is the nonrecallable transmission service and is computed as $\max\{NSCH(t), NRES(t)\}$

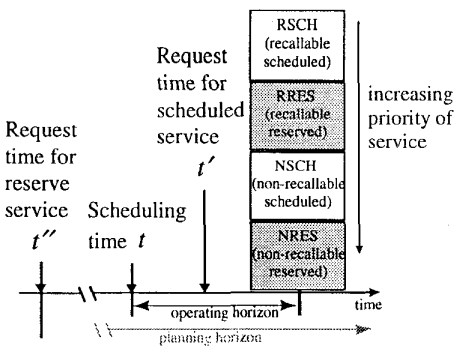

Figure 4. Priority of service

For a specific period,

$$NATC[period] = \min\{NATC(t) : t \text{ is an hour in the period}\}$$

The *RATC* is defined as follows:

for operating horizon:

$$RATC(t) = TTC(t) - a \bullet TRM(t) - RSCH(t) - NSCH(t)$$

for planning horizon:

$$RATC(t) = TTC(t) - a \bullet TRM(t) - RRES(t) - NRES(t)$$

where $0<a<1$ is a value determined by the individual TP based on its reliability considerations. Figure 5 show the relationship between TTC, ATC, and the scheduled and reserved transmission services.

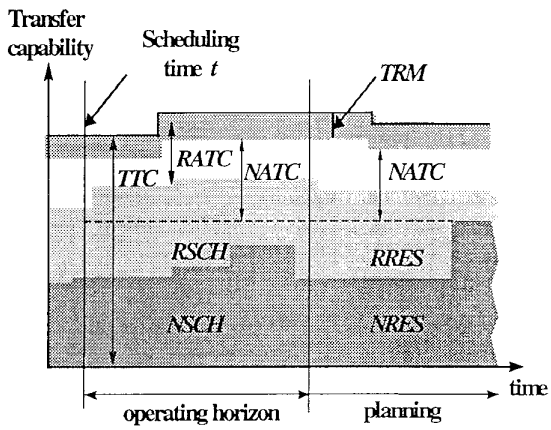

Figure 5. Transmission capability evaluation

In actual operations, *NSCH* services have the highest priority. *NSCH* services cannot be curtailed by the TP except in cases of emergency. *NATC* cannot include transfer capability that is currently held by *NRES* service because the reserve service would have priority over any new request for non-recallable service. However, *NATC* can include transfer capability that is currently used by *RSCH* service because a non-recallable service has priority over recallable service. *RATC* may be used for lowest priority service. It cannot include transfer capability currently used by *RSCH* service because the scheduled service would have priority over any new service.

The highly time and system condition dependent ATC is calculated by computer simulation based on forecast of conditions. Such conditions include the specification of contingency cases which must be considered in the evaluation. Due to the large scale computation involved, it is impractical to update the ATC posting for all paths all the time. FERC has defined constrained path and unconstrained path and issued separate requirements for each to reduce the workload. "A constrained path is one for which ATC has been less than or equal to 25 percent of TTC for at least one of the last 168 hours or is calculated to 25 percent or less of its associated posted TTC during the next 7 days." [2] Any path that is not a constrained path is an unconstrained path. Table 1 lists the OASIS posting requirements for both types of path.

THE OASIS*NET* SIMULATOR

A separate copy of OASIS*NET* simulator is required for simulating each node in the actual OASIS network. For a specified simulation horizon, OASIS*NET* can simulate the operations of an actual OASIS node on a compressed time scale basis, with the smallest unit of time representing one hour of real time. The overall block diagram of the simulator is shown in Figure 6. The shaded blocks are components of OASIS*NET*, which consists of the *Module Interface* and the *TTC/ATC Calculation, Transaction Coordinator, Power System*

Table 1. OASIS TTC/ATC Posting Requirement

TTC/ATC posting requirement	unconstrained path	constrained path
next 168 hours		X
next 7 days	X	
days 8-30		X
current month	X	
next 12 months	X	X

Simulation Engine, and *Graphic User Interface (GUI)* modules. The direction of data flow is indicated by arrows. For the purposes of modularity, all data flow between the modules are either through common databases or external files. The Case Data block is a set of files describing the simulated system, and the Other Program block can be another copy of OASIS*NET* running to simulate another node or some future packages that will interact with the simulator. The modules inside the dotted box, *TTC/ATC Calculation, Transaction Coordinator, Power System Simulation Engine* are located on a central server computer, while the *GUI* module is WWW-based. Multiple copies of the GUI may run at remote locations simultaneously as shown. Using the networking client/server terminology, each remote user is called a client. Each client computer accesses the web server through a web browser and runs a copy of the *GUI* module. The OASIS*NET* modules are distributed and connected by the Internet to emulate the networked environment of the actual OASIS. Both are subject to the same limitations and constraints such as data transfer rate and Internet communications delay.

The basic steps involved in the functioning of the OASIS*NET* simulator are shown in Figure 7 and explained below:

1. The simulation case is set up by the system administrator on the server using the *Module Interface*. At the start of simulation, the *Power System Simulation Engine* and *TTC/ATC Calculation* module are run on the base case to calculate ATC and TTC for the simulation horizon.
2. The OASIS*NET* users can connect to the server any time after the simulation starts via Internet and use

their web browser to run the *GUI* module. They can view information and/or submit requests.

3. At every time step, the *Transaction Coordinator* module checks for overload conditions and curtails transmission services to alleviate overloads if any exists. This check is followed by the processing of the transmission service requests by the *Transaction Coordinator* module by comparing them against the ATC values.
4. The *Power System Simulation Engine* and the *TTC/ATC Calculation* module are run on the simulated system with all the newly scheduled transmission services taking into account the requests submitted to calculate a new set of TTC and ATC.
5. The simulator repeats steps 3 and 4 at every time step until end of the simulation horizon.

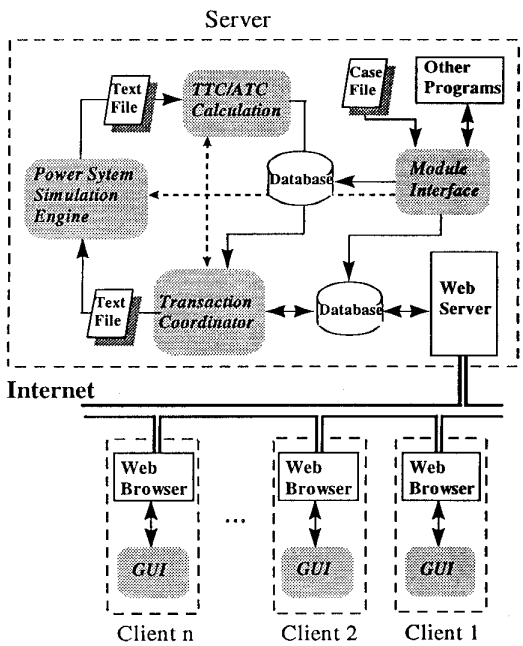

Figure 6. The OASIS*NET* structure

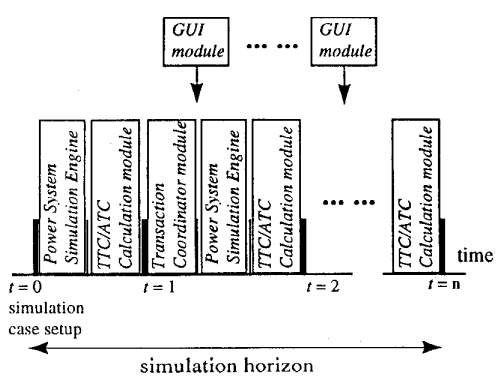

Figure 7. Simulation process in OASIS*NET*

All the modules in the server are controlled by the *Module Interface*, which determines when to call each of the modules and handles inter-module communications.

The function of *Power System Simulation Engine* is to emulate the interconnected transmission network and EMS for calculating OASIS information by conducting off-line load flow studies. These load flow data are used by both the *TTC/ATC Calculation* module and the *Transaction Coordinator* module. Currently, we are using the POWERWORLD v3.0 [4] simulation package as the *Power System Simulation Engine* in OASIS*NET* simulator. However, due to the modular architecture of the simulator, the *Power System Simulation Engine* can be easily changed to other simulation packages or future version of POWERWORLD. The *TTC/ATC Calculation* module is the most computationally intensive module of the simulator. It uses the load flow data to calculate the ATC and TTC values between each power selling and buying area pair by the Network Response Method [5]. From the TTC, *NATC* and *RATC* are derived based on their definition as discussed previously. The computational complexity is on the order of $O(\tau \bullet m \bullet n \bullet k)$, where τ is the amount of computation to find ATC between one area pair using the Network Response Method, m is the number of selling and buying area pairs in the transmission system, n is the total number of time steps in the simulation horizon, and k is the number of contingency cases considered.

The *Transaction Coordinator* module is the heart of OASIS*NET* simulator. It emulates the functions of an transmission system operator, who is responsible for maintaining safe and secure operations of the interconnected transmission network. The functions of *Transaction Coordinator* module include: checking and elimination of overload conditions in the transmission system, processing of transmission service requests, and the scheduling transmission services. The overload checking is done based on the load flow data from the *Power System Simulation Engine*. The processing of transmission requests are based on comparison of the requested capacities with their corresponding ATC value from the *TTC/ATC Calculation* module. A transmission service request is 'approved' if the requested service can be accommodated without violating ATC, and it is put into a database of scheduled services. The updated schedule then recorded in a file for the *Power System Simulation Engine*.

The *GUI* module provides a friendly interface for users to interact with OASIS*NET*. Essentially, it performs two functions, display of information and retrieval of user requests from individual clients to the server computer via Internet. The visual display consists of a series of windows, The next section provides a sample of representative windows.

SAMPLE STUDIES

We have made a number of applications of OASIS*NET* from very basic understanding of the workings of OASIS information and its dissemination, to uses of OASIS information by a broker for undertaking transactions to more advanced ones aimed at improving the design and implementation of OASIS.

An excellent application of OASIS*NET* is to analyze the nature of the FERC regulations. This can be done to ensure that unworkable regulations are not promulgated or that existing specifications can be improved. We have used OASIS*NET* to evaluate the suitability of the Internet as the medium for OASIS communications. Our studies show the importance of fast communication links for an OASIS node. Since the date and time stamp of each transmission service request is based on the time at which information is received by the OASIS node, it is possible for requests entered at an earlier time to arrive later than another request which is sent via an effectively faster link. Such studies point out the inherent limitations of the Internet as the medium of OASIS communications. OASIS*NET* could also be used by regulators to study the potential for violations of the regulations.

In another study we focussed on the critical importance of an OASIS user such as a generating entity making the necessary information available to the node operator on a timely basis. This study underlines the complex impacts that lack of timely information such as a planned generation outage has on the ATC information disseminated.

To illustrate the workings of the simulator, we walk through the results of the simulation of a case designed to focus on the difference between recallable and non-recallable services requests. All the OASIS*NET* displays consist of web pages displayed on web browsers. A simulation study starts with accessing the homepage of OASIS*NET*. The homepage provides pointers to other interface windows. These are the *area map, one-line diagram, system information, transaction processing, service information,* and *general information*. The first two windows show topological information of the simulated system. The other four windows provide the OASIS data in the four classes of information described in section 2. The display of *area map* brings up a graphic showing a map of the areas of the system. For the case system under discussion, a 23-bus, 3-area system, the map is shown in Figure 8.

The *system information* window is shown in Figure 9. The buttons at the top of this window can be used to move to the other windows or the OASIS*NET* homepage. The clock to the right of the buttons shows the current simulation time. All the OASIS*NET* windows have a uniform section at the top so as to give the users easy access to the information. In the middle of the window is the ATC table, showing both *NATC* and *RATC* for the transmission paths on an hourly basis. Since values change on an hourly basis, the simulator *GUI* module reloads to update the values at a specified interval. The ATC for both the constrained and unconstrained paths are listed.

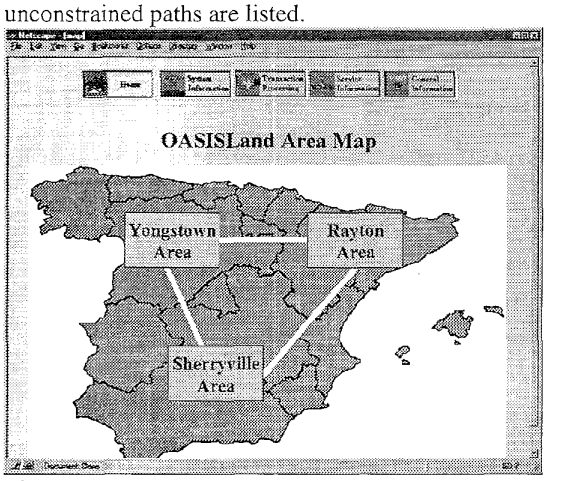

Figure 8. The *area map* window

Let us next discuss how requests for services are displayed. An example of a *Transaction Processing* window is shown in Figure 10. Such a window lists all current and scheduled transmission services. In addition, for each user request its status is shown. For example, as shown in Figure 10, the request *uiuc001*, made in the previous hour (hour 6:00), has been approved. This request is for non-recallable capacity of 200 MW on path S_Y from hour 8:00 to hour 12:00. The *NATC*[8:00 to 12:00] is 590 MW for that path, which clearly can accommodate the requested service. A second request, *berk001*, for recallable capacity of 100 MW on path R_Y from hour 8:00 to hour 13:00, is also approved. The display in *system information* window of Figure 9 is for the ATC values at hour 7:00. Note that the *RATC* for paths S_Y and R_Y are reduced to account for these two approved transmission services, while the *NATC* values show no reduction on the path R_Y, on which the recallable service of *berk001* is scheduled. A service request, in general, may effect more than one ATC path. OASIS*NET* simulates the impacts on all affected ATC paths for each service request. Another request for service, *uiuc002*, is made at hour 10:00, which is for non-recallable capacity of 650 MW on path R_Y from hour 11:00 to hour 15:00. The request is also approved. The window display at 11:00 is shown in Figure 11. However, this is done at the cost of curtailing another transmission service (not shown). The *NATC*(11:00) on path R_Y is 698 MW and the *RATC*(11:00) is 567 MW, 83 MW deficient to accommodate the non-recallable 650 MW service requested in *uiuc002*. The priority of service kicks in and results in the curtailment of the lower priority recallable *berk001* request by 83 MW. This example then, illustrates how services with different recallability levels are treated.

For each window, requests for historical data then can be made and obtained. This feature provides capability to conduct audit trails on the way transmission requests were received and handled.

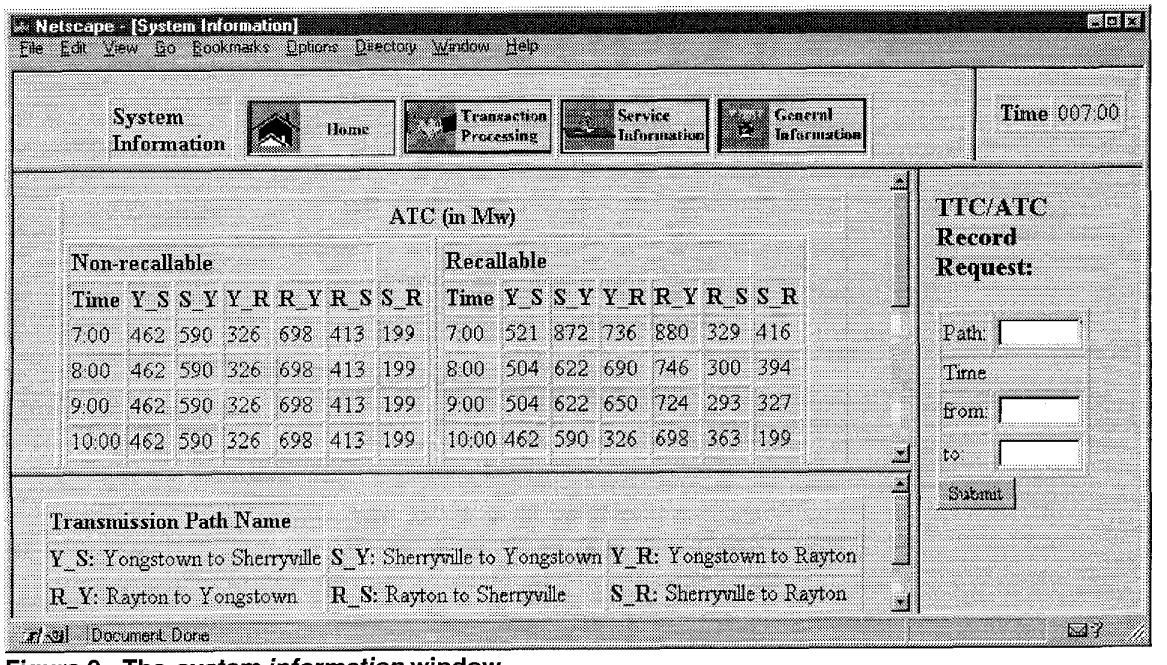

Figure 9. The *system information* window

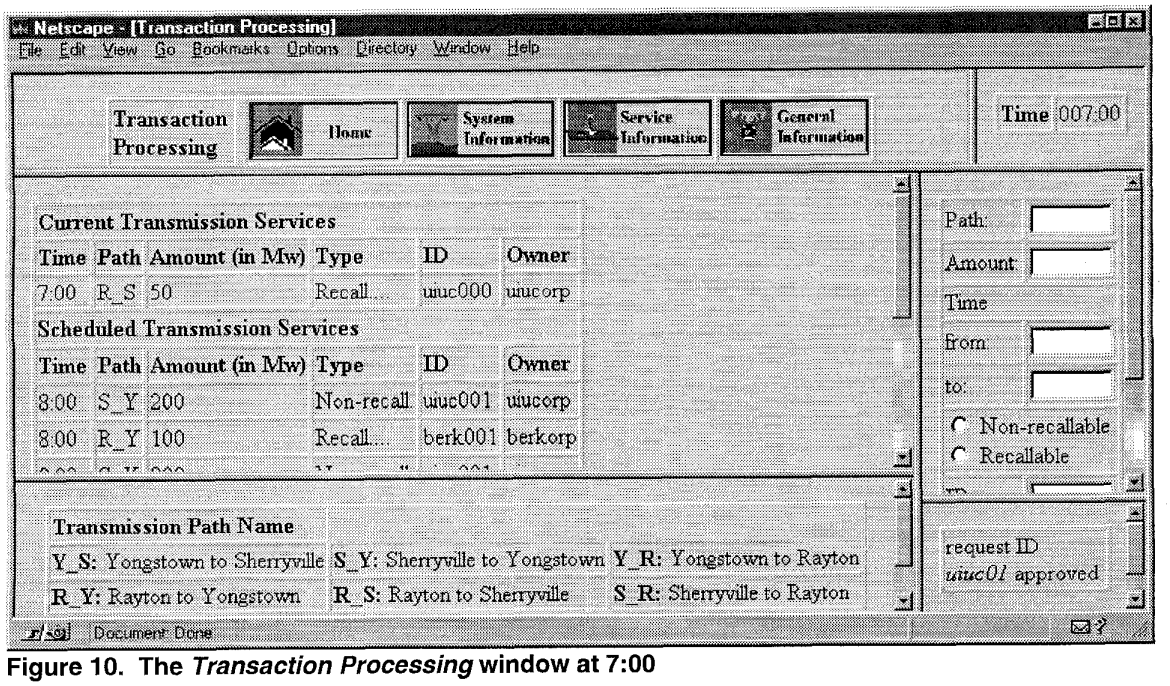

Figure 10. The *Transaction Processing* window at 7:00

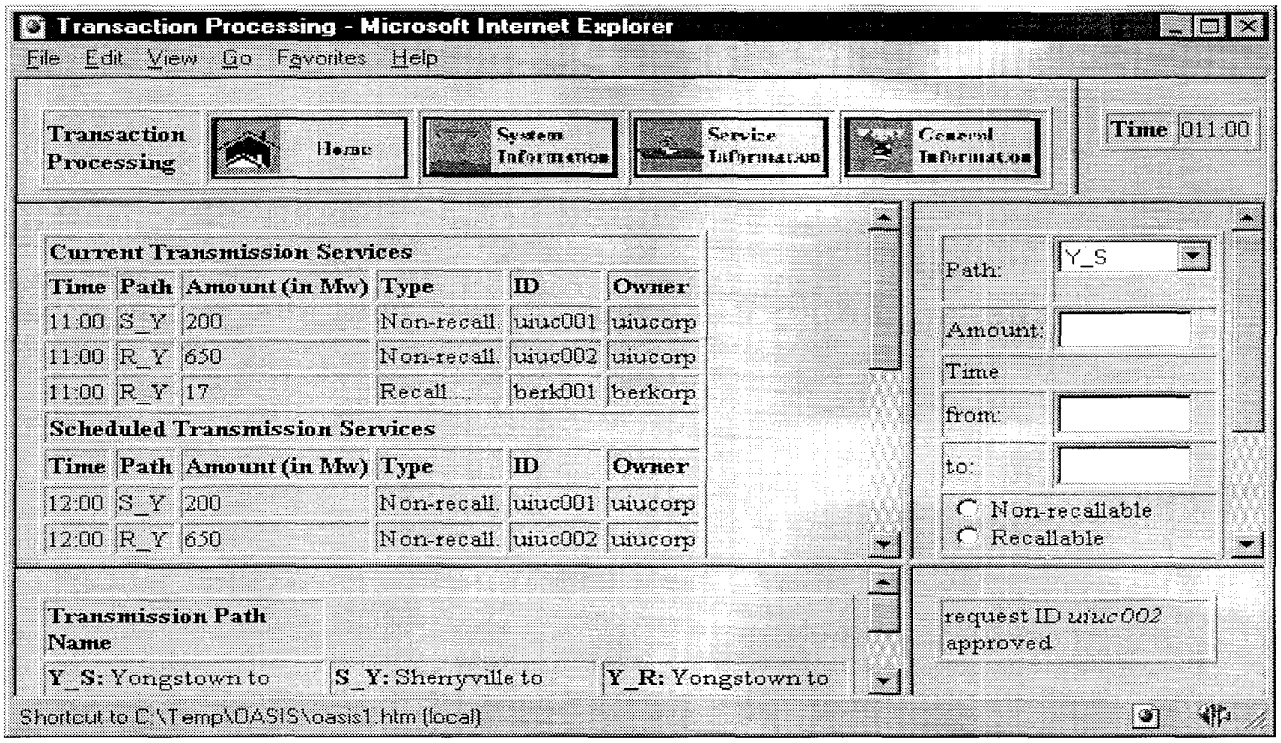

Figure 11. The *Transaction Processing* window at 11:00

SUMMARY

This paper presented a web-based simulator of multi-node OASIS network. Our OASIS*NET* simulator is capable of demonstrating the workings of the OASIS as envisioned by FERC in its Order 889. The simulation discussed here focused on ATC calculations. However, the modular structure of the OASIS*NET* architecture allows expansion to include other features as the need arises. Future developments include implementation of FERC specified template file formats, the simulation of the role of transmission pricing in undertaking transactions and the functioning of secondary markets in transmission services. In addition, the customization of OASIS*NET* for a specific OASIS node will be undertaken.

ACKNOWLEDGEMENTS

This research was performed with the support of the Grainger Foundation and the Power Affiliates Program of the University of Illinois at Urbana-Champaign.

REFERENCES

[1] G. Cauley, P. Hirsch, A. Vojdani, T. Saxton, and F. Cleveland, "Information Network Supports Open-Access", *IEEE Computer Applications in Power*, July 1996, pp. 12-19.

[2] FERC Order No. 889, Final Rule, "Open Access Same-Time Information System and Standards of Conduct," *Docket # RM95-9-000*, issued April 24, 1996.

[3] P.W. Sauer, "Technical Challenges of Computing Available Transfer Capability (ATC) in Electric Power System," *Proceedings of HICSS-30 Conference*, January 7-10, 1997.

[4] T. Overbye, P. Sauer, C. Marzinzik, and G. Gross, "A User-Friendly Simulation Program for Teaching Power System Operations", *IEEE Transactions on Power Systems*, Vol. 10, No. 4, November, 1995, pp. 1725-1732.

[5] Transmission Transfer Capability Task Force, *Available Transfer Capability Definitions and Determinations*, North American Electric Reliability Council, April 1996.

George Gross (F' 88) is the Grainger Professor of Electrical and Computer Engineering and Professor, Institute of Government and Public Affairs, at the University of Illinois at Urbana-Champaign. His current research and teaching activities are in the areas of power system analysis, planning, economics and operations, utility regulatory policy and industry restructuring. He was previously employed with Pacific Gas and Electric Company.

Yong Tian (S' 96) received his BE degree in Electrical Engineering from the Cooper Union for the Advancement of Science and Art in 1995. He joined the University of Illinois at Urbana-Champaign, where he has completed his M.S. in 1997.